SUNWE CRUSHER

SUNWE MINING MACHINERY

30 years of professional sevice in the crushing industry

CATALOGUE





https://sunwecrusher.com/
Serving the global mining industry

CONTENT

目录

COMPANY INFORMATION 03
企业介绍

PRODUCT 04
产品介绍

SC SERIES JAW CRUSHER-SC 系列鄂式破碎机 ····· 04
PES JAW CRUSHER-PES 鄂式破碎机 ····· 06
SCH SERIES SINGLE CYLINDER HYDRAULIC CONE CRUSHER-SCH 系列单缸液压破碎机 ····· 07
GPT SERIES SINGLE CYLINDER HYDRAULIC CONE CRUSHER-GPT 系列单缸液压破碎机 ····· 10
SP SERIES MULTI-CYLINDER HYDRAULIC CONE CRUSHER-SP 系列多缸液压破碎机 ····· 12
SYMONS CONE CRUSHER- 西蒙斯破碎机 ····· 14
COMPOUND SERIES CONE CRUSHER- 复合弹簧破碎机 ····· 16
SPRING CONE CRUSHER- 弹簧破碎机 ····· 17
PFS SERIES IMPACT CRUSHER-PFS 系列反击式破碎机 ····· 18
VERTICAL SHAFT IMPACT CRUSHER(VSI)- 立轴冲击式破碎机 ····· 19
MOBILE CRUSHER- 移动破碎机 ····· 20
GRIZZLY FEEDER- 棒条给料机 ····· 21
VIBRATING SCREEN- 振动筛 ····· 22
BALL MILL- 球磨机 ····· 24
SPARE PARTS- 备件 ····· 25

COMPANY SITE 26
工厂及现场照片

CASES 27
案例

CATALOGUE







SUNWE CRUSHER

COMPANY INFORMATION

企业介绍

SUNWE Mining Machinery Co., Ltd. was founded in 1996. We are a professional mining machinery manufacturer and supplier.

With the development of over 30 years, the company has abtained ISO 9001:2015 certification. The company has rich experience in manufacturing mining equipment and related accessories, providing cost-effective solutions tailored to customer needs.

We specialize in the design, manufacture, and sale of crushing and screening equipment. Our products are widely used in mining, aggregates, metallurgy, construction, and coal industries.

Let’s build your next project with reliable heavy equipment.

SC SERIES JAW CRUSHER

SC 系列鄂式破碎机

The SC-series jaw crusher is widely used for primary crushing in mines, capable of crushing various stone materials with a hardness not exceeding 320MPa.

Working Principle

The SC-Series jaw crusher operates on a compound pendulum principle with squeezing action. The electric motor drives the belt pulley, which in turn transmits motion through the eccentric shaft to impart a compound back-and-forth and up-and-down movement to the moving jaw. During the upward stroke of the moving jaw, the angle between the toggle plate and the moving jaw increases, propelling the moving jaw plate closer to the fixed jaw plate. At this stage, the material is crushed or split under compression, achieving the size reduction objective. During the downward stroke of the moving jaw, the angle between the toggle plate and the moving jaw decreases, and the moving jaw plate, under the action of the tie rod and spring, recedes from the fixed jaw plate, allowing the already crushed material to be discharged from the lower opening of the crushing chamber. As the motor continues to rotate, the moving jaw performs periodic movements, alternately crushing and discharging the material, thus enabling continuous production.



Product Features

1. Modular, weld-free design offers lightweight construction and high impact resistance.
2. Large, high-quality bearings ensure longer life and enhanced reliability.
3. Forged alloy steel eccentric shaft; front and rear frames of high-strength cast steel.
4. Optimized crushing kinematics with ideal nip angle and stroke for higher reduction ratio.
5. Higher rotational speed increases both the throughput and the number of crushing actions on the material, significantly boosting production capacity.
6. Quick discharge opening adjustment is achievable from both sides via wedge blocks, whether in hydraulic or mechanical configurations.
7. Easy maintenance and installation, with low operating costs.
8. Wide applicability, suitable for use in various mobile crushing plants.





Technical Parameter

Model	Feed Port Size (mm)	Max Feed Size (mm)	Power (kW)	CSS (mm)	Capacity (t/h)	Weight(t)
SC80	800*510	420	75	40-175	65-365	9.5
SC96	930*580	480	90	60-175	120-410	12.2
SC100	1000*760	630	110	70-200	140-510	23.5
SC106	1060*700	580	110	70-200	165-520	18.6
SC116	1150*760	650	132	70-200	180-540	22.3
SC120	1200*870	700	160	70-175	190-560	31.5
SC125	1250*950	760	160	100-250	260-775	44.0
SC130	1300*1000	800	185	100-250	285-850	45.8
SC140	1400*1070	860	200	125-250	345-870	54.2
SC150	1400*1200	1000	220	125-250	355-900	61.0
SC160	1600*1200	1000	250	150-300	445-1170	88.2
SC200	2000*1500	1200	400	175-300	645-1460	137.0

Capacity

Model	Capacity (t/h) at different CSS (mm)														
	40	50	60	70	80	90	100	125	150	175	200	225	250	275	300
SC80	65-90	75-110	95-130	110-150	120-160	140-195	150-210	190-270	225-310	260-365					
SC96			120-145	140-165	150-190	170-220	190-250	240-300	280-350	320-410					
SC100				140-195	160-220	175-240	195-270	235-330	280-385	325-450	370-510				
SC106				165-200	180-230	200-250	220-285	270-350	320-400	370-470	410-520				
SC116				180-225	195-255	220-275	240-305	285-365	335-425	385-485	425-540				
SC120				190-260	110-290	225-305	235-325	300-415	355-495	400-560					
SC125							260-355	310-425	360-495	410-565	460-635	510-705	560-775		
SC130							285-390	340-465	395-545	450-620	505-695	560-775	615-850		
SC140								345-475	400-560	455-635	515-715	570-790	630-870		
SC150								355-490	415-575	475-655	535-740	595-820	655-900		
SC160									445-630	510-715	575-810	640-900	700-985	760-1080	830-1170
SC200										645-910	725-1020	800-1125	880-1235	955-1340	1030 -1460

Product Gradation Curves

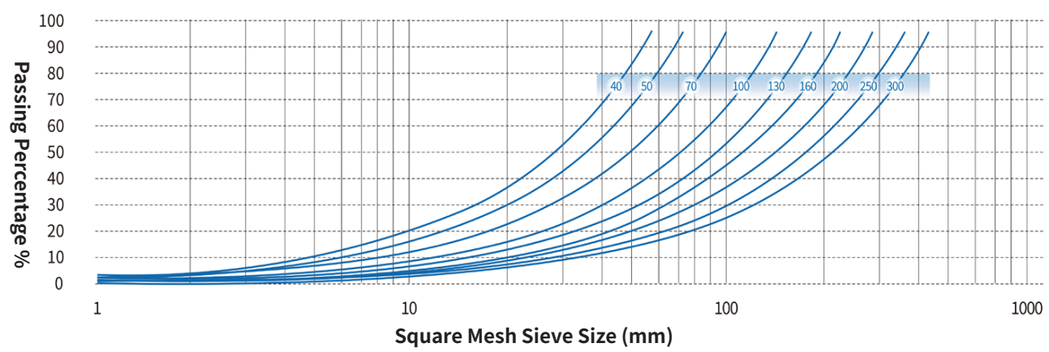

Note: The above data are for reference only and may vary depending on actual operating conditions.

PES SERIES JAW CRUSHER

PES 鄂式破碎机

Working Principle

The working components of the jaw crusher are two jaw plates: one is the fixed jaw plate (stationary jaw), mounted vertically (or slightly inclined outward at the top) on the front wall of the frame; the other is the moving jaw plate (swing jaw), positioned at an incline, forming a crushing chamber (working cavity) that is wider at the top and narrower at the bottom. The moving jaw plate performs periodic reciprocating motion against the fixed jaw plate, alternately opening and closing. During the opening stroke, material enters the crushing chamber, and the finished product is discharged from the bottom; during the closing stroke, the material trapped between the two jaw plates is subjected to compression, bending, and splitting forces, resulting in fragmentation. This crusher is suitable for primary and secondary crushing of hard and medium-hard materials.

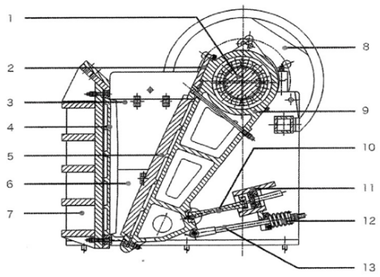

1. Main Shaft
2. Moving Jaw Guard Plate
3. Upper Cover Plate
4. Fixed Jaw Plate
5. Moving Jaw Plate
6. Lower Cover Plate
7. Main Frame
8. Pulley/Belt Wheel
9. Moving Jaw Assembly
10. Toggle Plate
11. Adjusting Wedge
12. Spring
12. Tie Rod



Product Features

1. Low noise, low dust. High reduction ratio and uniform gradation.
2. Simple structure, reliable operation, low operating costs. Safe lubrication system, easy parts replacement and maintenance.
3. Deep, dead-zone-free cavity improves feed capacity and throughput. Energy-efficient — single-unit savings of 15~30%, more than double the efficiency.
4. Wide CSS adjustment range to suit various needs. Shim-type adjustment device offers reliable, convenient operation and enhanced flexibility.

Technical Parameter

Model	Feed Openning (mm)	CSS (mm)	Max Feed Size (mm)	Capacity (t/h)	Eccentric Shaft Speed (r/min)	Motor Power (kW)	Dimensions (mm)
PES 400*600	400*600	40-100	350	14-36	275	30	1700*1732*1656
PES 500*750	500*750	50-120	400	30-80	250	45-55	1900*1876*1821
PES 600*900	600*900	75-200	480	56-192	250	55-75	2280*2245*2320
PES 750*1060	750*1060	80-235	630	108-256	250	90-110	2380*2550*2800
PES 900*1200	900*1200	90-265	750	180-500	220	110-160	3170*2900*3250
PES 1100*1400	1100*1400	150-300	900	380-800	180	200-250	4200*3030*3900
PES 1200*1500	1200*1500	150-300	960	450-1000	180	250-315	3800*3120*4155
PES 1300*1600	1300*1600	160-320	1050	850-1220	180	355-400	4450*3950*4520

SCH SERIES SINGLE CYLINDER HYDRAULIC CONE CRUSHER

SCH 系列单缸液压破碎机

Working Principle

Heavy-Duty Design
FEA-optimized frame and a high-alloy forged main shaft ensure reliability in severe conditions.
High-Performance Drive
Spiral bevel gears enable efficient, high-torque transmission, with externally adjustable backlash for easy maintenance.
Multiple Eccentric Throws
Adjustable via keyway repositioning to suit different ores and operating conditions.
Laminate Crushing
Optimized chamber design enhances interparticle comminution, boosting throughput and product shape.
Integrated Lubrication & Hydraulic System
A unified modular unit with separate partitioned tanks. Interlocked with the crusher, it provides automatic shutdown protection against abnormal temperature, pressure, or flow.



Product Features

S-Type Crusher
Three standard crushing chamber options available:
MC=Medium Coarse
C=coarse
EC=Extra Coarse

H-Type Crusher
Multiple standard crushing chamber options available:
EEF=Extremely Fine
EF=Extra Fine
EFX=Extra Fine X
F=Fine
MF=Medium Fine
M=Medium
MC=Medium Coarse
C=Coarse
CX=Coarse X
EC=Extra Coarse

The data provided are approximate indicators of crusher performance only.
The tabulated data are based on the crusher operating in open circuit, processing dry material with a bulk density of 1600 kg/m^3, and assume that the maximum feed size is the maximum permissible feed size for the crusher, with no fine material smaller than the closed side setting (CSS) present in the feed.
Since the crusher capacity is affected by factors such as the selected eccentric throw, reduction ratio, Bond Work Index (Wi) of the feed material, feed gradation, circulating load, and moisture and clay content in the feed, please contact us for further consultation regarding specific application conditions.





Technical Parameter

Model	Stand Power (kW)	Max Feed Size (mm)		Standard Production Capacity Under CSS (mm) for Tight Edge Discharge Port (t/h)																
				19	22	25	29	32	35		38	41	44	48	51	54	60	64	70	76	83
SCS420	90	EC	240		85	92-115	101-158	107-168	114-143		121										
		C	200	70	76-95	82-128	90-112	96													
SCS430	160	EC	360			126	138-173	147-230	156-293		165-293	174-327	183-344	196-306	250-256	214					
		C	300		108	116-145	127-199	135-254	144-270		152-285	161-301	169-264	108							
		MC	235	91	98-123	106-166	116-218	124-232	131-246		139-261	147-275	154-241	165							
SCS440	250	EC	450						267		282-353	298-446	313-563	334-601	349-524	365-456					
		C	440				225	239-299	254-381		269-484	284-511	298-448	318-398	333						
		MC	300			195	214-267	228-342	242-435		256-461	270-486	284-426	303-378	317						
SCS660	315	EC	560									349	368-460	392-588	410-718	428-856	465-856	489-978	525-1050	562-983	604
		C	500								318	336-420	353-618	376-753	394-788	411-823	446-892	469-822	504-631		

Model	Stand Power (kW)	Max Feed Size (mm)		Standard Production Capacity Under CSS (mm) for Tight Edge Discharge Port (t/h)																
				4	6	8	10	13	16		19	22	25	32	38	44	51	57	64	70
SCH420	90	EC	135				46	50-85	54-92		58-99	62-105	66-112	76-128						
		C	90				43-53	46-89	50-96		54-103	57-110	61-118	70						
		M	65			36-44	38-74	41-80	45-76		48-59									
		MF	50		36	38-67	40-71	44-68	47-53											
		F	38	27-34	29-50	31-54	32-57	35-48	38											
		EF	29	30-40 (80% fineness less than 4.5-5.5mm)																
SCH430	160	EC	185					69-108	75-150		80-161	86-171	91-182	104-208	115-208					
		C	145					66-131	71-142		76-152	81-162	86-173	98-197	109-150					
		MC	115					62-140	67-151		72-162	77-173	82-184	93-145						
		M	90					69-131	75-142		80-152	86-162	91-154	104						
		MF	75				61	70-115	76-124		81-126	87-114	92							
		F	50		48-78	51-83	54-88	59-96	63-103		68-105	72-95	77							
		EF	35	70-90 (80% fineness less than 5-5.6mm)																
SCH440	250	EC	215						114-200		122-276	131-294	139-313	159-357	175-395	192-384				
		C	175					101	109-218		117-292	125-312	133-332	151-378	167-335	183-229				
		MC	140					97-122	105-262		113-282	120-301	128-320	146-328	161-242					
		M	110					117-187	126-278		136-298	145-318	154-339	176-281	194					
		MF	85				114	124-227	134-245		144-263	153-281	163-299	186-248						
		F	70			90-135	96-176	104-191	112-206		120-221	129-236	137-251	156-208						
		EF	38	100-125 (80% fineness less than 6-7.5mm)																
SCH660	315	EC	275						177		190-338	203-436	216-464	246-547	272-605	298-662	328-511			
		CX	245						174-194		187-374	200-488	212-519	242-592	268-654	293-521	323-359			
		C	215						171-190		184-367	196-480	209-510	238-582	263-643	288-512	317-353			
		MC	173						162-253		174-426	186-455	198-484	226-552	249-499	273-364				
		M	135						197-295		211-440	226-470	240-500	274-502	302-403					
		MF	115					192	207-369		222-396	237-423	252-450	287-451	318-363					
		F	85					195-304	210-328		225-352	241-376	256-400	292-401	323					
		EF	65					211-293	227-316		244-298	261-290								
SCH870	500	EC	300									448-588	477-849	544-968	601-1070	658-1172	725-1291	782-1393	849-1512	906-1331
		C	240								406	433-636	461-893	525-1018	581-1125	636-1232	700-1357	756-1464	820-1461	876-1286
		MC	195								380-440	406-723	432-837	492-954	544-1055	596-1155	657-1272	708-1373	769-1370	821-1206
		M	155								400-563	428-786	455-836	519-953	573-1054	628-1154	692-1271	746-1372	810-1248	865-1098
		MF	100						379-424		407-716	434-765	462-814	527-928	582-942	638-789	702			
		F	90					357-395	385-656		414-704	442-752	470-800	535-912	592-857	649-718				
		EF	80				280-405	304-517	328-558		352-598	376-639	400-680	455-775	503-728	551-669				

GPT SERIES SINGLE CYLINDER HYDRAULIC CONE CRUSHER

GPT 系列单缸液压破碎机



Designed to heavy-duty operating conditions, the MG Series is suitable for crushing operations in mining and aggregate industries of all scales.
Models with the suffix "S" feature a larger feed opening and can be used for primary to secondary crushing (coarse to medium crushing), while models without the "S" suffix are intended for secondary to fine crushing (medium to fine crushing). This series offers the advantages of low operating cost, simple operation, and a wide range of applications.

Performance Features

High Reliability
The frame structure is optimized through finite element analysis (FEA), and the large-diameter main shaft design enhances equipment reliability.
High-Performance Drive Design
The main and pinion gears utilize spiral bevel gears, achieving high energy efficiency and high-torque transmission.
Wide Applicability
By changing the liners and selecting different eccentric throw settings, the crusher can adapt to various ore characteristics and operating conditions.
Optimized Crushing Chamber Profile
The chamber features an optimized design with a large feed opening, high throughput, and excellent product shape.
Easy Maintenance
The equipment is simple to operate. Liners can be installed without backing compound, and all crusher components can be lifted from the top for easy replacement of wear parts.





Technical Parameter

Model	Max Feed Size (mm)	Power (kW)	CSS (mm)	Capacity (t/h)	Weight (t)
GPT100S	210	90	20-45	80-250	7.5
GPT200S	290	160	25-50	115-360	11.2
GPT300S	330	250	25-50	175-540	16.5
GPT500S	440	355	45-80	310-1060	33.5
GPT700S	450	560	30-90	350-1500	63.5
GPT110	135	90	7-25	40-110	6.0
GPT220	205	220	8-35	70-280	10.5
GPT330	215	315	8-35	105-390	16.0
GPT550	235	400	10-45	140-510	27.2

Capacity

Model	Capacity (t/h) at Different CSS (mm)										
	20	25	30	35	40	45	50	55	60	65	70-90
GPT100S	80-90	105-130	120-200	135-240	150-250	160-235					
GPT200S		115-150	145-180	160-290	185-330	205-360	235-270				
GPT300S		175-200	175-280	195-410	215-510	240-540	260-360				
GPT500S						310-360	335-710	385-760	410-960	435-1060	Contact Us
GPT700S			350-450	430-640	500-840	580-970	650-1140	750-1140	830-1380	900-1500	Contact Us

Model	6	8	10	15	20	25	30	35	40
GPT110	40-55	45-70	50-80	55-110	70-110				
GPT220		70-90	80-130	105-175	120-230	150-265	165-280	180-260	
GPT330		105-145	110-190	130-260	155-300	180-350	210-390	265-360	
GPT550			140-165	160-310	190-340	230-410	250-450	280-510	350-450

Product Gradation Curves

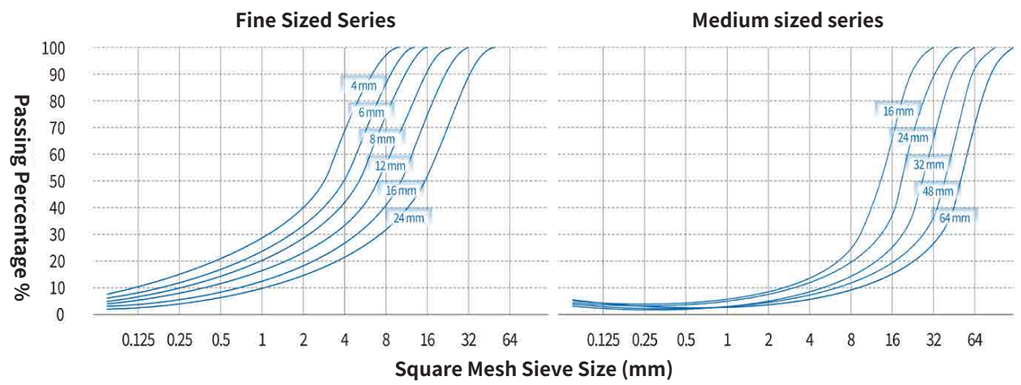

Note: The above data are for reference only and may vary depending on actual operating conditions.

SP SERIES MULTI-CYLINDER HYDRAULIC CONE CRUSHER

SP 系列多缸液压破碎机



The SP Series Multi-Cylinder Hydraulic Cone Crusher is primarily used for secondary or tertiary crushing in aggregate processing. This crusher has unique advantages in crushing materials with higher hardness and in fine crushing applications, making it widely used for crushing medium-hard materials such as river pebbles, granite, and basalt.

The SP Series Multi-Cylinder Hydraulic Cone Crusher is a new-generation high-efficiency hydraulic cone crusher developed by Shanghai Shanqi based on years of crusher R&D experience, combined with advanced domestic and international technologies, and through the development and application of several product generations. Built upon the traditional multi-cylinder hydraulic cone crusher foundation—featuring a fixed main shaft, an eccentric sleeve rotating around the main shaft, and the interparticle crushing principle—the equipment structure has been significantly optimized with breakthrough improvements, substantially enhancing the crusher's performance and crushing capacity. The professionally designed hydraulic and lubrication systems ensure reliable equipment operation while making operational control more intelligent and user-friendly.

Performance Features

1. **Upgraded Structure for Higher Efficiency**
Built on a fixed main shaft with an eccentric sleeve, the crusher optimizes drive components and sealing. It offers high load capacity and the industry's highest installed power in its class, with a compact footprint, high efficiency, and low noise.
2. **High Throughput**
Optimized crushing stroke, speed, and chamber profile boost throughput by 35%–60% over traditional cone crushers.
3. Interparticle Crushing for Superior Product Shape
Optimized equipment and cavity design enhance interparticle crushing efficiency, yielding higher crushing efficiency, lower wear consumption, and cubical products with high fines content—improving quality and reducing system-wide production costs.
4. **Fully Hydraulic Control for Precise, Reliable Operation**
All functions (chamber clearing, overload protection, CSS adjustment, and locking) are hydraulically actuated for stable, easy operation. The upgraded hydraulic system offers more accurate adjustment and faster automatic protection.
5. **High Reduction Ratio**
The HPS Series delivers a significant reduction ratio advantage when processing harder materials or requiring finer product sizes.
6. **Multiple Chamber Configurations for Versatile Application**
Offers various medium and fine crushing chambers. By changing liners and a few components, the crusher adapts to different configurations. Combined with interparticle crushing, it meets diverse medium and fine crushing needs—achieving true multi-purpose versatility with one machine.

Working Principle

During operation of the SP Series Multi-Cylinder Hydraulic Cone Crusher, the electric motor drives the drive shaft via a belt pulley and V-belts. The drive shaft, in turn, drives the eccentric sleeve to rotate around the fixed main shaft through the meshing of bevel gears. The eccentric sleeve then drives the cone head to perform a gyratory pendulum motion, continuously compressing, kneading, and grinding the feed material.
The material is subjected to multi-directional forces, causing it to break along its natural cleavage planes and be ground into building aggregates with high compressive strength. Material that meets the discharge size requirements is discharged through the gap created by the gyratory motion of the mantle, while the remaining material continues to be crushed until it reaches the final required size.

Technical Parameter

Model	Chamber Type	Standard Type		Short Type		Power (kW)	Capacity (t/h)
		Feed Size (mm)	Min CSS (mm)	Feed Size (mm)	Min CSS (mm)		
SP200	C	185	19	76	10	160	90-250
	M	125	17	54	6		
	F	95	13	23	6		
	EF			10	5		
SP300	EC	230	25			250	115-440
	C	210	20	75	10		
	M	150	15	50	8		
	F	105	10	20	6		
	EF			20	6		
SP400	EC	295	30			315	140-630
	C	250	25	90	10		
	M	195	20	50	8		
	F	110	14	40	6		
	EF			30	6		
SP500	EC	330	30			400	175-790
	C	285	25	90	13		
	M	200	20	55	10		
	F	133	16	40	8		
	EF			35	6		
SP800	EC	353	32			630	260-1200
	C	297	32	155	13		
	M	267	25	92	10		
	F	219	16	33	6		

Closed-Side Setting (CSS)(mm)											
	Model	10	13	16	19	22	25	32	38	45	51
Capacity (t/h)	SP200	90-120	120-150	140-180	150-190	160-200	170-220	190-235	210-250		
	SP300	115-140	130-185	180-220	200-240	220-260	230-280	250-320	300-380	350-440	
	SP400	140-175	185-230	225-280	255-320	275-345	295-370	325-430	360-490	410-560	465-630
	SP500	175-220	230-290	280-350	320-400	345-430	365-455	405-535	445-605	510-700	580-790
	SP800	260-335	325-425	385-500	435-545	470-600	495-730	545-800	600-950	690-1050	785-1200

SYMONS CONE CRUSHER

西蒙斯破碎机



The Symons Series Cone Crusher is one of the most widely used cone crushers currently available. Renowned for its reliable operation and superior performance, it has found the broadest applications in mines and aggregate quarries worldwide. Both the Standard and Short Head types of the Symons Series Cone Crusher are capable of choke-fed operation.

The Symons Series Cone Crusher utilizes hydraulic actuation for overload protection, discharge opening adjustment, and crushing chamber clearing, ensuring safe and reliable operation with quick response, easy handling, and significant savings in time and labor.

Product Features

1.High crushing force
2.High throughput
3.Multiple crushing chamber profiles, uniform product gradation, and excellent product shape
4.Low maintenance cost

Structural Diagram

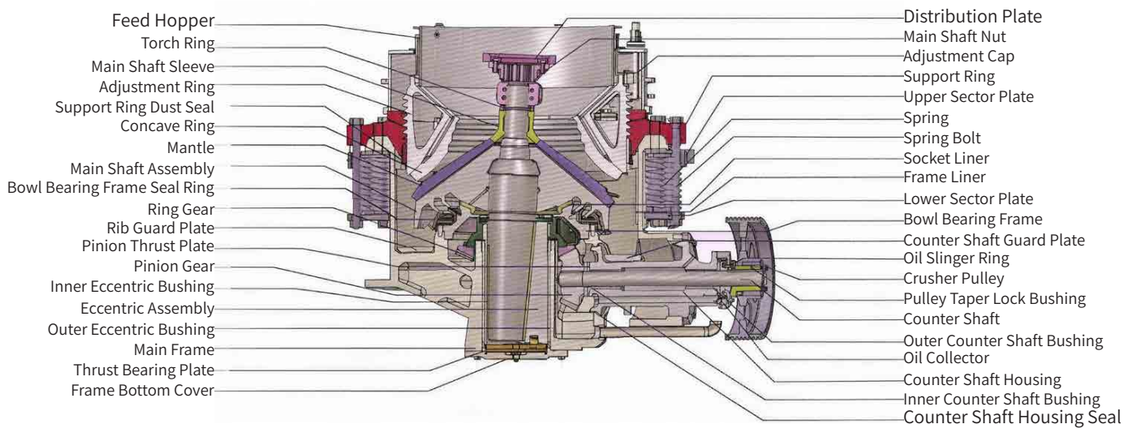





Model	Breaking Diameter (ft)	Cavity Type		Feed Opening（mm）		Min CSS (mm)	Main Motor Power (kW)	CSS (mm)	Capacity (t/h)
				Closing Side	Openning Side				
PYS-B0910	3′（914）	Standard	F	83	102	10	75	10-22	45-91
PYS-B0917			C	159	175	13		13-38	59-163
PYS-B0918			EC	163	178	25		25-38	118-163
PYS-D0904		Short Head	F	13	41	3		3-13	27-90
PYS-D0906			C	33	60	3		3-16	27-100
PYS-D0907			EC	51	76	6		6-19	59-127
PYS-B1313	4¼′(1295)	Standard	E	109	137	13	155/185	13-31	109-180
PYS-B1321			M	188	210	16		16-38	130-250
PYS-B1324			C	216	241	19		19-51	170-350
PYS-B1325			EC	238	259	25		25-51	236-360
PYS-D1306		Short Head	E	29	64	5		5-16	50-160
PYS-D1308			M	54	89	6		6-16	74-160
PYS-D1310			C	70	105	10		10-25	98-215
PYS-D1313			EC	98	133	19		19-25	180-225
PYS-B1620	5½′ (1676)	Standard	E	188	209	16	240	16-38	181-327
PYS-B1624			M	213	241	22		22-51	258-417
PYS-B1626			C	241	269	25		25-64	300-635
PYS-B1636			EC	331	368	38		38-64	431-630
PYS-D1607		Short Head	E	35	70	6		6-13	100-209
PYS-D1608			M	54	89	6		6-19	136-310
PYS-D1613			C	98	133	10		10-25	190-336
PYS-D1614			EC	117	158	13		13-25	253-336
PYS-BC2127	3′（914）	Standard	E	253	278	19	400/450	19-38	540-800
PYS-BC2133			M	303	334	25		25-51	670-1100
PYS-BC2136			C	334	369	31		31-64	870-1400
PYS-BC2146			EC	425	460	38		38-64	970-1500
PYS-DC2110		Short Head	E	51	105	6		6-16	300-450
PYS-DC2113			M	95	133	10		10-19	390-560
PYS-DC2117			C	127	178	13		13-25	500-660
PYS-DC2120			EC	152	203	16		16-25	560-720

COMPOUND SERIES CONE CRUSHER

复合弹簧破碎机



The Compound Series Cone Crusher is a modern high-performance crusher developed by our company based on advanced Symons technology and customer requirements, designed on the principle of interparticle crushing and "more crushing, less grinding." It integrates high swing frequency, optimized chamber, and reasonable stroke. Widely used in mining, hard rock crushing, building materials, cement, aggregate, concrete, dry-mix mortar, power plant desulfurization, and quartz sand processing.

Product Features

Large main shaft, heavy-duty frame, and automatic thin-oil lube ensure rugged durability and reliable operation.
Tramp iron relief quickly restores original discharge setting after uncrushable material passes, ensuring consistent sizing.
Laminated crushing creates a material cushion, reducing wear and increasing cubical product particles.
Mechanical locking of wear parts (no filler) enables quick, easy replacement, saving time and labor.

Model	Chamber	Max Feed Size (mm)	Min CSS (mm)	Power (kW)	Capacity(t/h)										Weight (t)
					CSS(mm)										
					6	10	13	16	19	22	25	38	51	64	
1000	C	160	13	110			80	100	135	150	175	235			13
	M	115	10			65	75	90	120	135	150				
	F	80	8		52	62	72	78	115						
	EF	50	6		60	65	65	70	102						
1200	C	180	13	132			115	135	150	180	200	260			18
	M	130	10			100	110	120	135	165	175				
	F	90	10			80	105	110	140						
	EF	60	6		60	74	150	110	130						
1300	C	200	16	185				150	180	200	230	310	390		25
	M	150	13				115	140	160	190	210				
	F	102	10	200		90	115	145	160						
	EF	70	8			88	110	135	155						
1400	C	215	19	220					200	220	260	350	440		28
	M	160	16					155	180	200	220				
	F	115	13				150	190	210	230					
	EF	76	8			122	148	185	200						
1650	C	235	22	220-250						265	310	420	525	580	40
	M	175	19						215	240	265	320			
	F	130	13				180	210	235	255	275				
	EF	90	10			148	178	200	220						
1950	C	350	22	300						330	390	525	655	725	50
	M	203	16					230	270	300	330				
	F	140	13				185	225	265	340					
	EF	95	10			180	220	260	335						

SPRING CONE CRUSHER

弹簧破碎机



Widely used in the Quarrying and Mining industries, the Spring Cone Crusher, otherwiseknown asa Gyratory Crusher, is mainly used for Secondary and or Tertiary crushing. Thesewell known machines are available in 4 sizes, being 900mm diameter, 1200mm diameter,1750mm diameter, and 2200mm diameter. The 900,1200,and 1750 models are all availablewith fine, medium, or coarse crushing cavities, and the 2200 machine is available in fine orcoarse cavities.

Advantages and Characteristics

These machines have an improved dust and water preventative sealing system whichensures longer service of the crusher in harsh conditions. The crushing surface between themantle and concave has been re designed to maximize the percentage of cubical shapedproduct rather then elongated stone. To obtain maximum production and the most desired
product shape it is recommended that these machines be continuously" choke fed".

Technical Parameter

Model	Crushing Cone Diameter (mm)	Max Feed Size(mm)	CSS Adjustment Range(mm)	Capacity (t/h)	Motor Power (kW)	Ecdentric Shaft Speed (r/min)	Weight (t)
PYB900	900	115	12-50	50-90	55	333	11.2
PYZ900	900	60	5-20	20-65	55	333	11.2
PYD900	900	50	3-13	15-50	55	333	11.3
PYB1200	1200	145	20-50	110-168	110	300	24.7
PYZ1200	1200	100	8-25	42-135	110	300	25
PYD1200	1200	50	3-15	18-105	110	300	25.3
PYB1750	1750	215	25-60	280-480	160	245	50
PYZ1750	1750	185	10-30	115-320	160	245	50
PYD1750	1750	85	5-15	75-320	160	245	50
PYB2200	2200	300	30-60	590-1000	280	220	80
PYD2200	2200	100	5-15	120-340	280	220	81.4

Note: Capacity is total tons per hour passing through crusher at open circuit when density of feeding is $1.6*10^3$kg/m^3. Capacity are relative to physical property and type of feeding. Feeding size and compose. The capacity charts is for properlyusing PYZ cone crusher and get to its capacity. Crusher iscomponent of mining production line, so it' s character resultfrom feeder, conveyor, screen, electric motor, drive part, surgebin,noticing follow can enhance crusher capacity and character.

PFS SERIES IMPACT CRUSHER

PFS 系列反击式破碎机



The PF Series Hard Rock Impact Crusher is configured for secondary crushing after the primary crusher. It can crush ores and rocks with a compressive strength not exceeding 320 MPa, featuring high throughput and fine discharge size.
The crushed products exhibit a cubical shape with low needle-flake content and no internal cracks, making it the preferred equipment for producing high-quality aggregates in industries such as high-grade highways, water conservancy, airports, and construction.

Advantages and Characteristics

1. Adjustable apron-to-blow-bar gap enables precise discharge control and superior shape. Cleavage-plane crushing reduces energy and increases efficiency.
2. Keyless connection cuts maintenance, ensuring reliable, cost-effective operation. High-chromium blow bars provide strong impact/wear resistance. The crusher offers high productivity, low wear, and overall efficiency.
3. Compact and lightweight, it delivers high capacity at low cost. A large feed opening and high chamber suit hard materials. Up to 40% crushing ratio simplifies circuits from three stages to two or even one, lowering plant equipment costs.

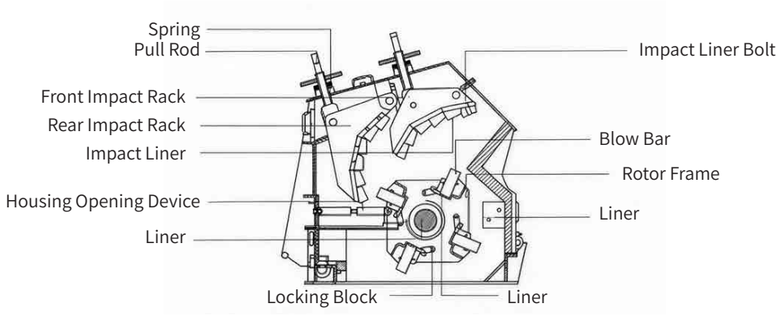

Technical Parameter

Model	Rotor Size (mm)	Feed Size (⩽ mm)	CSS (mm)	Capacity (t/h)	Power (kW)	Overall Dimensions (mm)	Weight (t)
PFS-1010	1000*1000	⩽ 250	0-80	30-60	55-90	2400*1920*2520	10.2
PFS-1210	1250*1050	⩽ 300	0-80	60-100	90-132	2700*2100*2850	14.3
PFS-1214	1250*1400	⩽ 300	0-80	70-140	132-185	2700*2400*2850	16.8
PFS-1315	1325*1500	⩽ 300	0-80	100-150	220	3200*2750*2600	19.4
PFS-1320	1320*2000	⩽ 400	0-80	180-320	280	3340*3200*2880	29.5
PFS-1515	1500*1500	⩽ 350	0-80	180-280	280	3660*2850*3350	28
PFS-1620	1600*2000	⩽ 400	0-80	350-400	250*2	3690*3520*3560	37

VERTICAL SHAFT IMPACT CRUSHER(VSI)

立轴冲击式破碎机



Widely used for shaping and artificial sand making in aggregate production, as well as for fine crushing in mining and aggregate operations.

By adjusting the center feed rate, cascading flow rate, and rotor speed, various aggregate gradations can be achieved to meet diverse product specifications.

Product Features

1. Rock-on-rock crushing delivers excellent particle shape with low flakiness and low wear costs.
2. Compact, low-height design with reduced foundation load enables easy on-site installation.
3. Overload, temperature, and vibration monitoring ensure reliable operation.
4. Grease lubrication is simple and reliable; hydraulic lifting and tooling ease maintenance, boosting productivity.

Technical Parameter

Model	Max Feed Size (mm)	Rotor Linear Speed (mm)	Power（kW）	Weight（t）
SVS7150	50	45-70	264-320	13.6
SVS9100	60	45-70	440-630	17

Capacity

Model	Power (kW)	Processing Capacity (t/h) Corresponding to Different Rotor Tip Speeds (m/s)					
		45	50	55	60	65	70
SVS7150	2*132	310	275	245	205	185	165
	2*160	375	315	285	250	210	190
SVS9100	2*220		500	450	375	335	305
	2*250			525	465	395	360
	2*315			600	530	455	410







MOBILE CRUSHER
移动破碎机



Mobile Cone Crusher
This series is normally used as secondary and tertiary crushing equipment, working together with mobile jaw crushers. It is suitable for processing various materials and accepts maximum feed size within the range of 80 to 300 mm.

Mobile Jaw Crusher
This series issuitable for processing various materials,whether soft or hard, such as limestone,basalt, iron ore, and slag. It boasts strong adaptability and accepts a maximum feed size ranging from 450 to 1000 mm.

Mobile Impact Crusher
This series offers acrushing ratio of approximately 10, making it highlyeffective for processing medium-hardness materials with low silica content. It delivers finished products in a single stage of crushing and accepts a maximum feed size ranging from 400 to 1000 mm.

Mobile Screen
This series is normally used together with mobile conecrushers orimpact crushers for aggregate classification.In some cases, it can also be utilized for removing impurities from raw materials.









GRIZZLY FEEDER
棒条给料机



Performance Advantages
1. The vibration unit features a heavy-duty dual-shaft structure with 'shaft eccentric' + 'block eccentric' design.
2. The gears are synchronized with oil bath lubrication.
3. The trough body and bearings are designed for heavy-duty conditions, with strong impact resistance.
4. Large processing capacity.
5. High-strength wear-resistant plates protect the internal parts of the feeder; these wear plates can be easily replaced.
6. The drop height between the bars at both ends is high, preventing material blockage.
7. The gap between the bars is adjustable within the range of 80-200mm, making it suitable for various types of stone materials.
8. With frequency control, the bar vibration frequency can be adjusted.
9. It can start with stone material load without the need to empty the trough body.

Size (mm)	VF1032 (Direct-drive)	VF1048 (Direct-drive)	VF1248 (Belt-driven)	VF1360 (Belt-driven)	VF1560 (Belt-driven)	VF1860 (Direct-drive)	VF2060 (Direct-drive)
L	3120	4800	4800	6000	6000	6000	6000
W	2907	2907	2653	2702	3057	4060	4317
H	1371	1540	2102	2501	2552	2280	2674
A	2600	3552	3555	4420	4420	5001	5018
B	590	957	2217	2724	2640	1357	1804
C	1355	1380	1495	1736	1736	1786	2286
D	1037	1010	1052	1177	1177	1203	1650
E	1600	1616	1876	2042	2246	2496	2703
F	1418	1496	1656	1756	1956	2264	2544
G	1016	1016	1216	1316	1516	1816	2016

Size (mm)	Trough Length(mm)	Grizzly Bar Length(mm)	Bar Spacing(mm)	Feed Size(mm)	Capacity (t/h)	Double Amplitude(mm)	Power (kW)	Weight (kg)
VF1032	1000*3100	1*900	80-100	600	250-300	8-10	15	3515
VF1048	1000*4800	2*900	80-100	600	250-300	8-10	15	5129
VF1248	1200*4800	2*900	80-110	800	350-500	8-10	18.5	5582
VF1360	1300*6000	2*1200	90-120	900	450-600	8-10	22	7564
VF1560	1500*6000	2*1200	100-120	1000	550-800	8-10	30	8100
VF1860	1800*6000	2*1200	120-160	1200	800-1200	8-10	45	11298
VF2060	2000*6000	2*1200	120-180	1300	1000-1500	8-10	55	14991

LINEAR VIBRATING SCREEN

直线振动筛



Developed by our company through the absorption of advanced foreign screening technology, the SLF Series Linear Vibrating Screen represents a new generation of high-efficiency screening equipment. Compared with conventional circular vibrating screens, it delivers over 50% higher processing efficiency, making it ideal for quarries, mineral processing, coal selection, building materials, power, and chemicals.

Performance Advantages

1. Compact design, heavy-duty construction, long service life
2. High screening efficiency and large capacity, outperforming similar equipment
3. Rubber connectors ensure smooth operation and low failure rate
4. Feed-end rubber protection extends screen mesh life
5. Advanced oil lubrication system reduces wear on critical components (bearings, main shaft, exciters)
6. Simple structure for easy maintenance

Technical Parameter

Model	Width*Length (mm)	S-type, Single-layer Weight(kg)	D-type, Double-layer Weight(kg)	T-type, Three-layer Weight(kg)
SLF2460	2420*6000	6580	11000	13340
SLF3070D	3020*7000	-	15430	-

1 Deck Linear Vibrating Screen

SLF1836	SLF1848	SLF1861	SLF2436	SLF2448	SLF2461	SLF3048	SLF3061
SLF3073	SLF3642	SLF3648	SLF3661	SLF3673	SLF4373	SLF4385	-

2 Deck Linear Vibrating Screen

2SLF1848	2SLF1861	2SLF2448	2SLF2461	2SLF3048	2SLF3061	2SLF3073
2SLF3648	2SLF3661	SLF3648	2SLF3673	2SLF4361	2SLF4385	-

3 Deck Linear Vibrating Screen

3SLF2461	3SLF3061	3SLF3073	3SLF3673

CIRCULAR VIBRATING SCREEN

圆振动筛



The SYK Series Vibrating Screen is a new type of vibrating screen designed by our company based on optimization for the production site. It can be widely used in the mining, building materials, and other industries for screening various loose minerals and rocks. Based on customer needs, we offer two-layer and three-layer series vibrating screens.

Performance Advantages

1. The vibrating screen adopts an eccentric shaft combined with an eccentric block structure, allowing adjustable amplitude to ensure higher screening efficiency.
2. The side plates are bent and connected to the crossbeam with high-strength bolts, and the entire screen has a weld-free structure.
3. The vibrating springs are made of rubber, offering a longer service life.
4. It can be equipped with modular screens of different aperture sizes.

Application Fields

The SYK Series Vibrating Screen is a new type of vibrating screen optimized and designed by our company based on actual production requirements. It uses a cylindrical eccentric shaft exciter and an eccentric block to adjust the amplitude.

Application fields: It is widely used in industries such as mining, building materials, and construction.

Technical Parameter

Model	SYK2160	SYK2170	SYK2470	SYK3070	SYK3080	SYK3280	SYK3680
Number of layers	2/3	2/3	2/3	2/3	2/3	2/3	2/3
Aperture size(mm)	3-150	3-150	3-150	3-150	3-150	3-150	3-150
Double Amplitude(mm)	7-8	7-8	7-9	7-9	7-9	7-9	7-9
Vibration Frequency (r/min)	800	800	800	800	800	800	800
Feed Size(mm)	⩽ 200	⩽ 200	⩽ 200	⩽ 200	⩽ 200	⩽ 200	⩽ 200
Capacity(t/h)	100-750	100-750	150-950	150-1100	150-1100	150-1200	200-1200
Power(kW)	37/45kW	37/45kW	37/45kW	45/55kW	2*30/2*37kW	2*37kW	2*45kW

2 Deck Circular Vibrating Screen

2SYK3072	2SYK3373	2SYK3673	2SYK3685

3 Deck Circular Vibrating Screen

3SYK2670	3SYK3072	3SYK3373	3SYK3685

BALL MILL
球磨机



The ball mill is a critical machine for fine grinding after material crushing. It is designed for grinding a wide range of ores and other materials, and finds extensive application in sectors such as cement, silicate products, new building materials, refractories, fertilizers, non-ferrous metal beneficiation, non-metallic mineral processing, as well as the glass and ceramics industries.

Performance Advantages

Large-diameter double-row spherical roller bearings replace plain bearings, reducing friction and energy consumption with easy start-up. Retains conventional end cover design, large feed/discharge openings for high throughput.

Technical Parameter

Model	Shell Diameter (mm)	Shell Length (mm)	202Effective Volume (m^3)	Max. Ball Charge (t)	Operating Speed (r/min)	Motor Power (kW)
MQS2130	2100	3000	9	20	23.8	210
MQS2136		3600	10.8	22		210
MQS2140		4000	12	24		245
MQS2145		4500	13.5	27		245
MQS2430	2400	3000	11.7	22.5	22.7	280
MQS2436		3600	14	26		315
MQS2442		4200	16.3	30		355
MQS2736	2700	3600	18.5	39	21.7	400
MQS2740		4000	20.6	42.5		440
MQS2745		4500	22.1	46		500
MQS2750		5000	25.7	51		630
MQS2760		6000	30.8	64		800
MQS3040	3000	4000	25.5	48	19.5	630
MQS3045		4500	29	53		630
MQS3230	3200	3000	21.3	46	18.6	500
MQS3236		3600	25	58		630
MQS3245		4500	32.8	65		800
MQS3260		6000	43.7	90		1000
MQS3639	3600	3900	36	75	17.8	1000
MQS3645		4500	41	90		1250
MQS3650		5000	46.2	96		1400
MQS3660		6000	57	120		1600
MQS4060	4000	6000	69.8	137	16	1700
MQS4270	4200	7000	89	176	15.7	2200
MQS4560	4500	6000	87	158	15，1	2300
MQS4866	4800	6600	107.5	200	15	3000
MQS5592	5500	9200	202	375	13.7	5200

SPARE PARTS FOR CRUSHER



COMPANY SITE


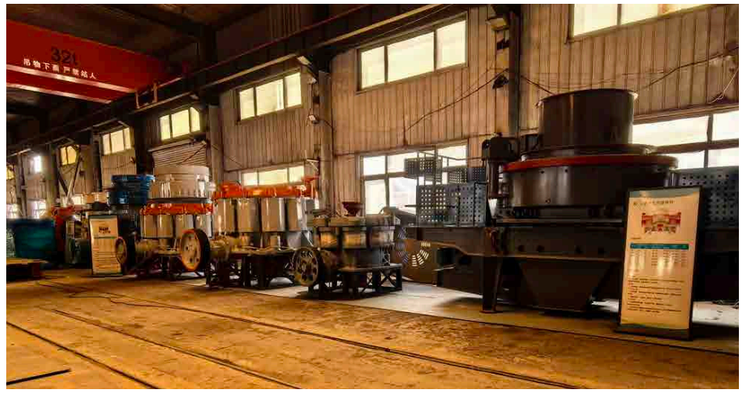









CASES






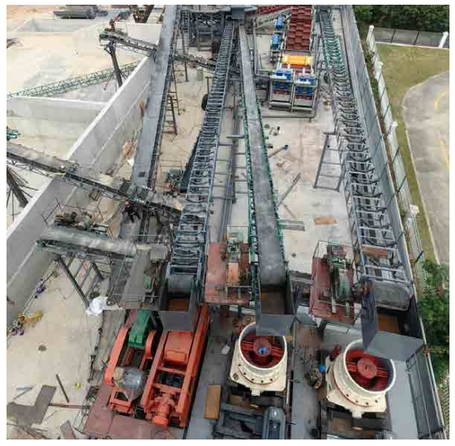

SUNWE MINING MACHINERY

No. 83, Development 23 Road, Shenyang Economic and Technological Development Zone, Shenyang City, Liaoning Province, China

info@sunwecrusher.com
+86 186 4053 5178
+86 132 3667 9321

https://sunwecrusher.com/